Proceedings of IJTC2006
STLE/ASME international Joint Tribology Conference
October 22-25, 2006, San Antonio, TX, USA

IJTC2006-12036

STABILITY ANALYSIS OF A HIGH SPEED AUTOMOTIVE TURBOCHARGER

R.G. KIRK and A.A. ALSAEED
Rotor Dynamics Laboratory
Mechanical Engineering Department
Virginia Polytechnic Institute & State University
Blacksburg, Virginia 24061 USA

E.J. GUNTER
RODYN Vibration Analysis, Inc.
Charlottesville, Virginia 22903 USA

ABSTRACT

Automotive turbochargers are known to have operation into the linear unstable region. The operation in the nonlinear limit cycle has been tolerated on most applications to date. The need for quieter, smoother operation and reduced emissions has prompted new evaluations of the rotor bearing design for these systems. In this research a commercial rotordynamics computer program is used to evaluate the stability and transient response of a high speed automotive turbocharger. Various models with varying bearing designs and properties have been solved to obtain the linear stability threshold speeds and also the non- linear transient response. The predicted whirl speed map shows two modes of instability and is very similar to the limited test results in the literature. The calculation process is discussed in detail and the results of the current research will be compared to the literature. An experimental research project is currently in progress at Virginia Tech and those results will be documented in a future publication.

Keywords: turbocharger, seals, fluid-film bearings, stability, transient response.

INTRODUCTION

Turbochargers are a vital class of turbornachinery intended to increase the power of internal combustion engines. Their total design, as in the other turbomachines, involves different types of analyses such as mechanical, thermal and acoustical. Engineers and researchers are still searching for ways to improve their designs while keeping the balance between the needs and costs. The first turbocharger was invented in the early twentieth century by the Swiss engineer Alfred Buchi who introduced a prototype to increase the power of a diesel engine. The idea of turbocharging at that time was not widely accepted. However, in the last few decades, turbocharging has become essential in almost all diesel engines with the exception being very small diesel engines [1]. Their use in the gasoline engines has also shown a good boost for the power output.

Since the earliest turbocharger prototypes, researchers have attempted to develop the design to be more reliable for users. These studies were conducted on the output performance of the turbochargers with focus on the thermodynamics of the process. Although thermal analysis is an important part of the design process, thorough rotordynarnics investigations of the turbochargers did not have a great attention and relatively few studies were presented for the rotordynamics analysis of turbochargers.

The advances in rotordynamics analysis using the up-to-date computation technology have made the dynamics of turbochargers rotor—bearing system a rich area for investigation. Vendors are still looking for ways to have more dynamically stable turbochargers for the benefit of their business and customers satisfaction. More contributions are needed to have optimum design stability while assuring continued low cost production.

The current research aims to evaluate the dynamic stability of an automotive turbocharger rotor-bearing system using both linear and nonlinear analysis. The capabilities of a commercial Finite Element Analysis (FEA) computer program will be implemented in the investigation process. The results will demonstrate how linear analysis of turbocharger rotordynarnics can be very beneficial for both the design and the maintenance of the turbocharger system.

LITERATURE REVIEW

The rotordynarnics of high-speed rotating machinery has been always a challenging, and more often the most interesting, part of the design process. Almost all machinery exhibit vibration problems and need frequent maintenance to extend their operation. Turbocharging is a way to increase the power output of an engine by introducing air into the engine cylinder with higher density than ambient. This can be achieved by a compressor driven by a turbine. The engine hot exhaust gas is used to drive the turbine. In fact, increasing the power output of the engine (also called supercharging) does not always come with a better efficiency. There is a recognized practice to supercharge the automotive engine by using the mechanical

power of the engine itself. In other words, a belt can transfer the engine torque to a compressor that boosts the pressure of the intake air going into the engine cylinder. Obviously that method would take from the engine power itself, while the super-charging is being performed. However, turbochargers can utilize the wasted hot exhaust gas to increase the engine power, without as much loss of efficiency.

The commercially available turbochargers can be sub-divided into two principal groups: those primarily designed for use on automotive and truck engines, and those for use on medium-speed and low speed diesel engines for railway traction, electricity-generating sets, industrial and marine applications. The difference between the two principal groups can be summed up as a contrast between small, simple and cheaply mass-produced units, and larger, more complex, expensive and reliable industrial or large marine units.

Turbochargers are widely used in trucks and diesel engines. There are also some gasoline fueled cars and other special purposes vehicles that use turbochargers. A small turbocharger consists basically of a compressor and a turbine coupled on a common shaft.

The most important factor in the design of an automotive turbocharger is the initial cost. Engineers aim to undercut the cost of producing larger engines capable of providing the same power. Even though truck engines operate at modest break-mean-effective-pressure (~14 bar) and hence at lower boost pressure (up to 2.5:1), they work at much higher exhaust temperature [1]. Because of truck engines heavy operations, they demand good acceleration and high torque over a wide speed range. They also require a high level of reliability and efficiency.

There are several ways to reduce the costs of turbochargers. However, the best way to achieve that is to keep the design as simple as possible. Fig. 1 shows a very frequent assembly of an automotive turbocharger. It has a simple inboard bearing mounting arrangement with a radial outflow compressor and a radial inflow turbine on a single shaft.

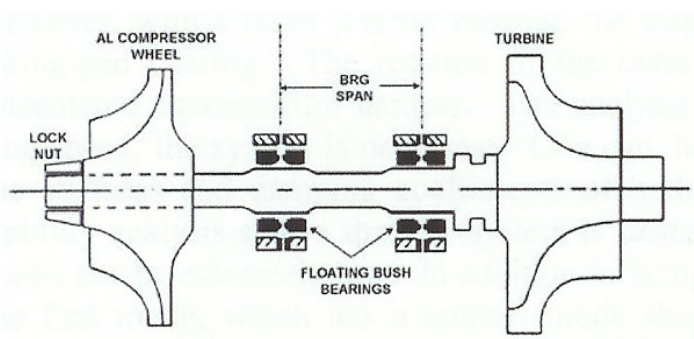

Fig. 1: Turbocharger Rotor-Bearing System [2]

The compressor impeller in most automotive type turbo-chargers is made of aluminum (LM-16-WP or C-355T61). Aluminum LM-27-M is also used for the compressor casing, unless the compressor impeller is made from other material than aluminum. On the other hand, the turbine rotor should withstand a much higher operating temperatures that could be as high as 1000 K (1340.6° F), or more. Therefore, the most convenient material to use for that purpose is 713C Inconel (a high nickel alloy). The turbine rotor casing should also withstand high temperatures, but not resist as high pressure as the turbine. There are three different types of materials used for the turbine rotor casing depending on their operating temperatures. S.G. iron (spheroidal graphite) is used for operating temperatures up to 975 K, high-silicon S.G. iron is for temperatures up to 1000 K, and high nickel cast iron for temperatures above 1000 K. The shaft is usually made of high-carbon steel (C1144 steel, EN 19C) to allow induction hardening of journals.

The turbine rotor in most common automotive turbo-chargers is connected to its shaft by using friction welding or an electron beam welding method. The compressor is usually a loose or very light interference fit on the other end of the shaft. A self locking nut is used to hold the impeller against an abutment on the shaft. A friction created between the shaft and compressor is sufficient to transmit the torque. Therefore, no splines or keys are needed. Fig. 2 shows the elements of a typical automotive turbocharger.

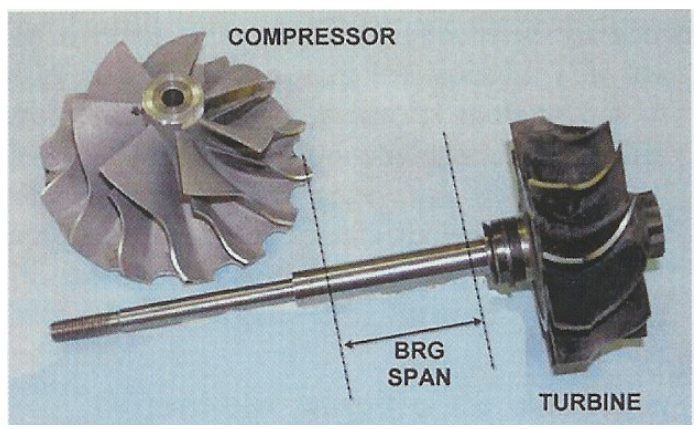

Fig. 2: Disassembled Turbocharger [2]

Most of automotive-size turbochargers, if not all of them, incorporate simple journal bearings. They use the engine lubricating oil system for their bearings to assure low cost and simplicity of maintenance, instead of having a separate system. Ball bearings are not used for most commercial engine applications because of their short life and difficult access for replacement. Special high performance engines in automotive racing applications, can afford the added expense of ball bearings and current designs make use of ceramic ball elements.

The primary consideration in the design of high-speed rotating machinery in the context of rotordynamics is to control and minimize response to forced vibration (and in particular,

rotor unbalance). But there exists another class of vibration - rotordynamic instability and self excited vibration - which involves an additional set of design approaches, requirements, and constraints to ensure trouble-free, quiet, and durable rotating machinery. [3]

Almost all rotors of automotive turbochargers exhibit strong subsynchronous vibrations as well as the more usual unbalance vibrations found in other rotating machinery. These vibrations are undesirable as they cause noise (rumble) and can be of large amplitude, causing rotor-stator rub. [4]

Unbalance generally arises in rotors by two main causes: mass eccentricity and shaft bow. Mass eccentricity is a natural phenomenon in all rotors due to the offset of mass centroid, whereas shaft bow is commonly caused by thermal effects. Unbalance vibrations are harmonic (or synchronous) with shaft speed. They can be mainly solved by balancing the rotor (correcting the centroid offset) or by straightening the shafts that been bowed by thermal effects.

Self-excited vibrations, on the other hand, are different from the forced or unbalance vibrations. They often developed during the operation of the rotor, but they do not naturally exist there. In other words, when the rotor stops running, the mechanical unbalance will still exist, however, the sources of self-excited vibrations will not.

Rotordynamic instabilities that caused by self-excited lateral vibrations occur at the system critical (natural) frequencies, and below the running speed (subsynchronous). They usually increase as the running speed increase until nonlinearities in the system forbid higher amplitudes. The mechanism of self-excitation can be categorized as: whipping and whirling, parametric instabilities, stick-slip rubs and chatter, and instabilities in forced vibrations [3].

Subsynchronous instabilities in turbochargers are commonly referred to as whirling or whipping. The main sources of whirling and whipping in turbochargers are: internal rotor damping (hysteretic whirl), fluid-film journal bearings, and aerodynamic cross-coupling. This research will highlight the fluid film bearings affects on the rotordynamic instabilities of turbochargers.

Whirling and whipping arise in turbochargers in fluid film bearings as the viscous fluid (usually engine oil) circulates in the bearing clearance with an average velocity of about one-half the shaft's surface speed. Instabilities are expensive in business matters because of the operation delays they cause in addition to redesign and modification costs. These factors supply the need to design a stable turbocharger rotor-bearing system, which becomes a top priority for manufactures. In the past, there were not many research works presented for the rotordynamics of turbochargers because of the short of alternative – inexpensive - methods of examining model design [5, 6]. However, in the recent years, developments in computational methods have made the design process much easier, faster, and reliable [7-9].

There are many approaches to improve the stability of automotive turbochargers. One way is to modify the bearing characteristics. Bearing type, shape or preloads can be altered. However, most automotive turbochargers are running in floating ring (bushing) bearings (see Fig. 3). These bearings show most reliable high-speed stability operation to manufacturing cost currently available in the market. However, most recent researches [2, 4, 9] show that subsynchronous vibrations still exist in these floating ring bearings with high amplitudes.

Fig. 3: Floating Ring Bearings [2]

Certainly, improvement and upgrade of the rotor-bearing system for automotive turbochargers are fundamental needs to all vendors and users. With the use of advanced computational methods, evaluation of the rotordynamics of turbochargers becomes a vital part of the design process.

NONLINEAR DYNAMICAL RESPONSE

Nonlinearities are inherent in all automotive turbochargers running in fluid film bearings. Although they are vital in damping the destabilizing forces in the rotor-bearing system, instabilities will arise as these destabilizing forces exceed the nonlinearities effect. An analytical approach using DyRoBeS© [7] code has been conducted to evaluate the nonlinear behavior of a turbocharger in floating ring bearings compared to former experimental investigations.

Turbochargers with Floating Ring Bearings: Floating ring bearings have become the standard type for small automotive turbochargers. They are likely preferred for the damping characteristics they provide to stabilize the rotor motion. In fact, fixed journal bearings (see Fig. 4) are known to have poor stable operations in high-speed rotors. Turbochargers normally run at speeds of 60,000 RPM and more, in most automotive types. In larger turbochargers like the diesel locomotive type, fixed journal bearings (e.g. 3 lobe or offset bearing) can be used with added external damping (e.g. squeeze-film damper) technique. This additional damping will reduce the destabilizing forces effects to have smoother running. However, in small automotive turbochargers, the aforementioned technique is difficult to maintain due to size and cost consideration [2].

Therefore, the design of floating ring bearings (Fig. 5) introduces the external damping without the need of larger bearing housings.

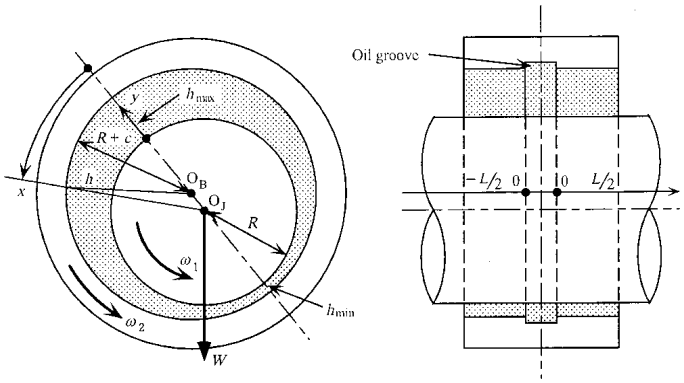

Fig. 4: Plain Journal Bearing [9]

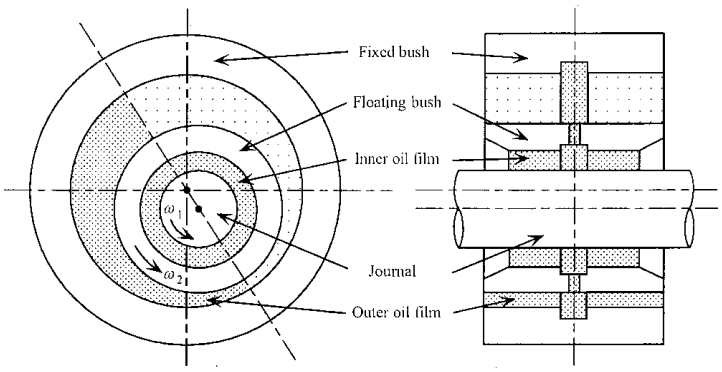

Fig. 5: Floating Ring Bearing [9]

The floating ring bearing consists of a floating ring (bush) that rotates freely in an outer journal bearing with six-oil-groove feedings, in most designs. The ring also has six-oil groove to supply oil between the outer film and inner film. The inner clearance is normally smaller than the outer clearance. Theoretically, the ring rotates in about one-half the speed of the shaft. However, experimental studies [2] show that the floating ring rotational speed increases with the shaft speed but never reaches one-half.

One significant reason why floating ring bearings are widely employed is that they are inexpensive to produce. Immediate alternative bearings that show better dynamic stability performance are possible to apply, but that would cost much more. Hence, designers are still trying to improve the floating ring bearing dynamical behavior and search for other reliable and inexpensive options.

Experimental Investigation of Whirl Instabilities: A former experimental work on the vibration of a typical turbocharger with floating ring bearings was presented by Holmes [4]. Fig. 6 shows clearly the high subsynchronous vibrations amplitudes found on that turbocharger. Whirl instability starts at a very low speed. The first low frequency whirl mode is a rigid body mode of conical shape with the turbine and compressor wheels moving out of phase. This mode evidently dominates over a large speed range. At speeds above 40,000 RPM, a second whirling mode starts to build up. Both of the turbine and compressor wheels are whirling forward in phase at the second resonance frequency.

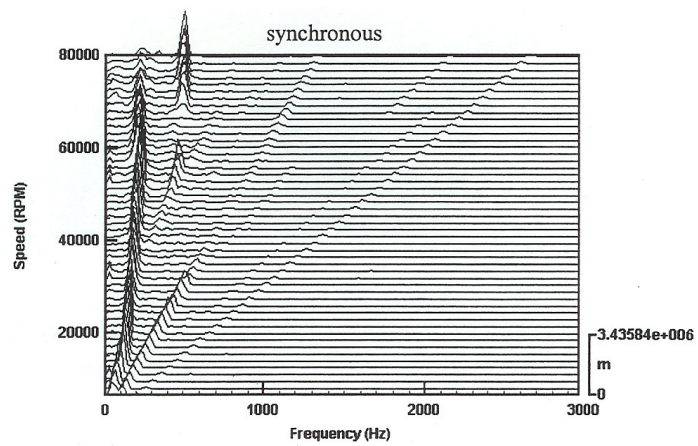

Fig. 6: Typical Turbocharger Waterfall Diagrams [4]

As can be observed from Fig. 6, the second whirl mode re-stabilized at speeds around 55,000 RPM. A likely explanation of second whirl mode disappearance is the slight increase in bearing loading due to the possible presence of turbocharger third mode [2]. The second whirling mode shows up again at speeds above 70,000 RPM with higher amplitudes. The first conical whirling mode start to vanish as speed increased further. This may be due to the high limit cycle motion of the second mode that likely increases the bearing loading.

In fact, experimental investigation results show reliable information for the rotordynamics of turbochargers. Nevertheless, experimental work requires considerable expenses and time. Alternative methods for dynamical analysis became a critical necessity for designers.

Analytical Prediction of Whirl Motion: Computational advances in the recent years have made it possible to rely on FEA in rotating machinery design and diagnosis. Several commercial codes are currently available with varying levels of sophistication. DyRoBeS© is a powerful rotor dynamics program based on FEA. This program has been developed for the analysis of free and forced vibrations (Lateral, Torsional, and Axial) of multi-shaft and multi-branch flexible rotor-bearing-support systems. The acronym, DyRoBeS©, denotes "Dynamics of Rotor Bearing Systems". [7]

Model Assumption: In the current research, an automotive type turbo will be analyzed using DyRoBeS© capabilities. A model of the rotor-bearing system is first developed as shown in Fig. 7. The rotor shaft is made of carbon steel and the turbine is made from Inconel.

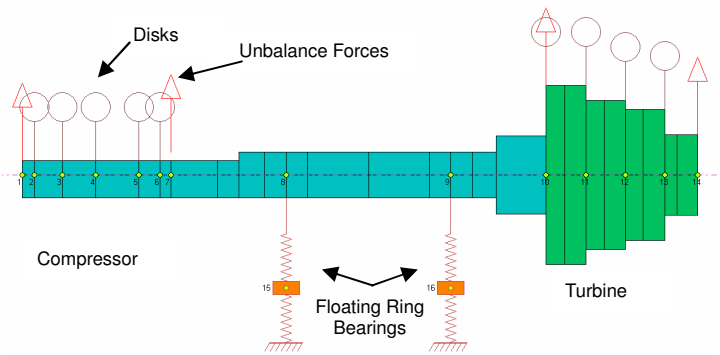

Fig. 7: Turbo Model with Floating Ring Bearings [10]

As can be seen from the model, the shaft and turbine are jointed as one body. The aluminum compressor weight will be assumed as added disks to the rotor. Two nonlinear floating ring bearings are placed between the turbine and compressor with the exact dimensions as provided by the vendor. .

There are inherent unbalance forces that act on the rotor-bearing system. The model employed values of 0.95×10^{-3} kg-mm, 1.1×10^{-3} kg-mm, 0.63×10^{-3} kg-mm, and 0.49×10^{-3} kg-mm, respectively from the compressor end. These imbalance levels are typical of this class turbocharger.

Time Transient Analysis: In order to examine the nonlinear behavior of the turbocharger with floating ring bearings, Time Transient Analysis was performed. The transient response for the rotor system was calculated for speeds from 10,000 RPM to 150,000 RPM with increment of 10,000 RPM. For comparison purposes between each speed response, the time interval and time step for computational integration were chosen in way to have approximately 166 shaft cycles in each running speed. Newmark solution method for integration was used in all calculations with a time step increment of 2×10^{-6} s. The only effects considered in the analysis are the unbalance forces and gravity.

The FFT spectrum data were collected for each speed then plotted accordingly using a specially developed Matlab code. Fig. 8 and Fig. 9 display the waterfall diagram calculated from the time transient analysis of the turbocharger for speeds from 10,000 RPM to 150,000 RPM. The first waterfall diagram data were picked from the compressor end tip and the second data were from the other opposite side, the turbine end tip.

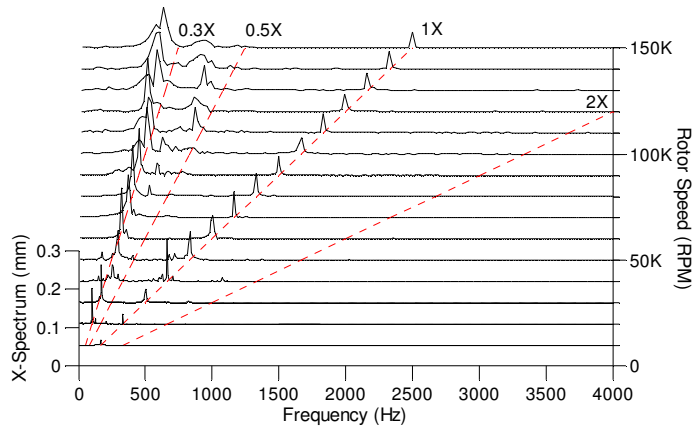

Fig. 8: Turbo Waterfall Diagram at Compressor End Tip [10]

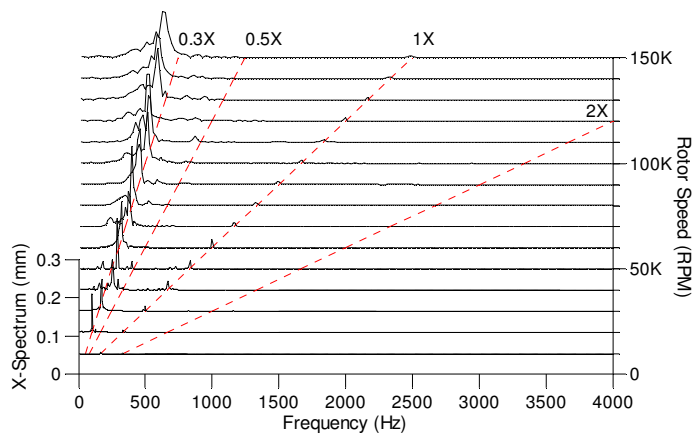

Fig. 9: Turbo Waterfall Diagram at Turbine End Tip [10]

One can notice the similarities between the experimental data (Fig. 6) and the computed data (Fig. 8). The waterfall diagram from the compressor end tip (Fig. 8) clearly shows the subsynchronous vibrations found from the analysis. The low frequency whirling mode starts at speed 20,000 RPM. This first conical whirling mode then dominates with high amplitudes over the higher running speeds. The second in-phase whirling mode can be seen at speeds between 80,000 RPM and 100,000 RPM. A third whirl mode starts at 110,000 RPM and continues to 130,000 RPM then vanishes gradually over the speed range.

The unbalance synchronous vibrations found in the waterfall diagram (Fig. 8) are significantly high. Excessive imbalance loads can be harmful to the bearings and the turbocharger casings.

Fig. 10 displays the shaft transient response at 100,000 RPM. One can observe higher whirling motion of the compressor end (Fig. 11), compared to the turbine rotor. This could be a result of the heavier weight of the turbine. That probably explains why vibration data at the compressor end (Fig. 8) is richer than the turbine end (Fig. 9). In addition, nonlinear forces in the floating ring bearings make the shaft

whirls in limit cycle in both ends. However, operation on high whirl motions could be harmful to the bearings and turbocharger casing.

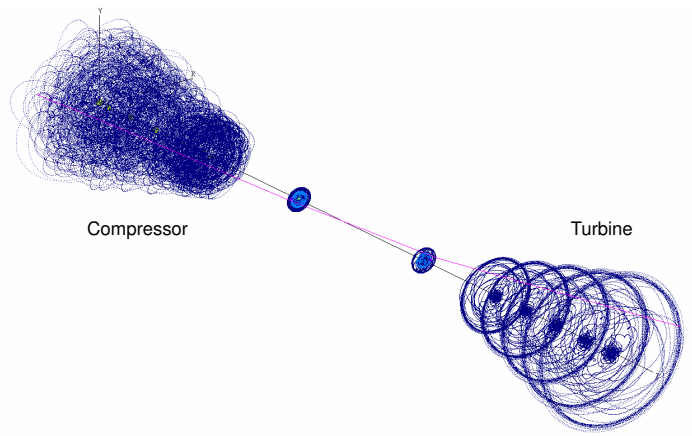

Fig. 10: Shaft Transient Response at N = 100,000 rpm [10]

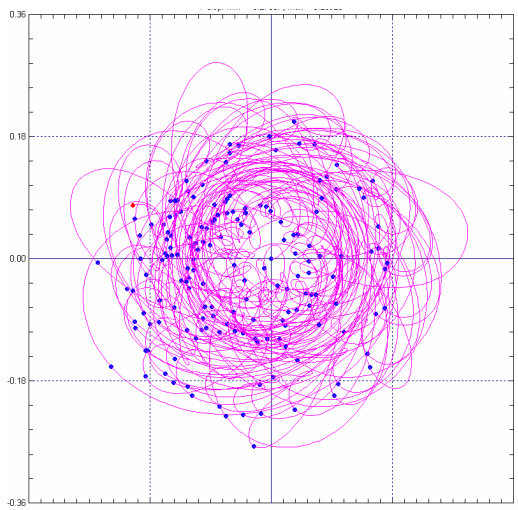

Fig. 11: X-Y Orbit Plot of the Shaft at Compressor End [10]

In order to further understand and detect the nonlinear dynamical performance of the turbocharger rotor-bearing system, it's always recommended to study the linear response. Therefore, the next part of the paper will be on linear analysis of the turbocharger.

LINEAR DYNAMIC ANALYSIS

Steady State Synchronous Response: The turbocharger with floating ring bearings modeled as two journal bearings in series was evaluated for the steady state synchronous response. Fig. 12 displays the linear synchronous unbalance response calculated from the rotor compressor end and turbine end, at running speeds from 10,000 RPM to 150,000 RPM with increment of 2,000 RPM. The turbocharger starts to exhibit high displacement response over the speed of 100,000 RPM. The system reaches the second critical speed at about 130,000 RPM. This would be the bending mode, where the displacement at the rotor both ends tend to be very large. The compressor end shows larger whirl than the turbine rotor which is about four times the displacement at the first critical speed.

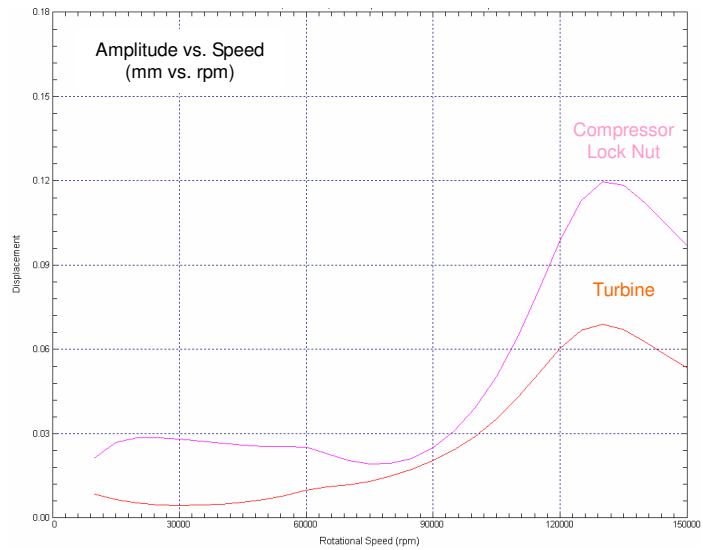

Fig. 12: Turbo Synchronous Unbalance Response [10]

Fig. 13 and Fig. 14 represent the two unstable whirling mode shapes predicted from the stability analysis results. The whirl speeds of the first unstable mode and the second unstable mode are 10,901 RPM and 23,546 RPM, respectively. It can be seen clearly from Fig. 13 that the whirling mode is a rigid body mode where both ends of the rotor (compressor and turbine wheels) whirl forward out of phase. From Fig. 14, both ends in the second unstable mode whirl forward in-phase with small bending in the shaft.

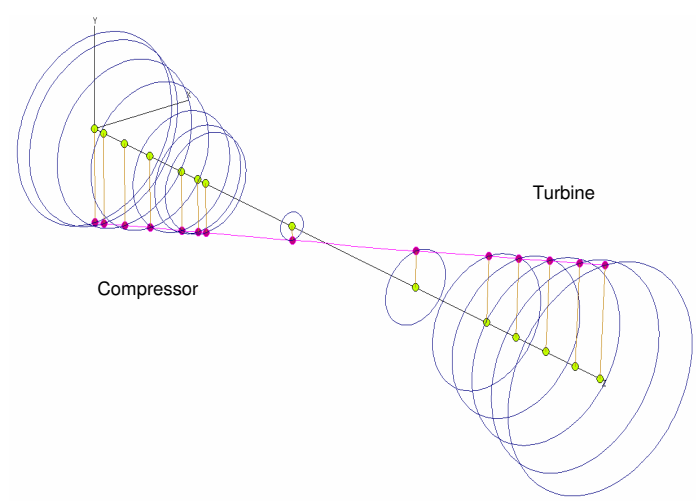

Fig. 13: Unstable Forward Precession at Whirl Speed 10,901 rpm [10]

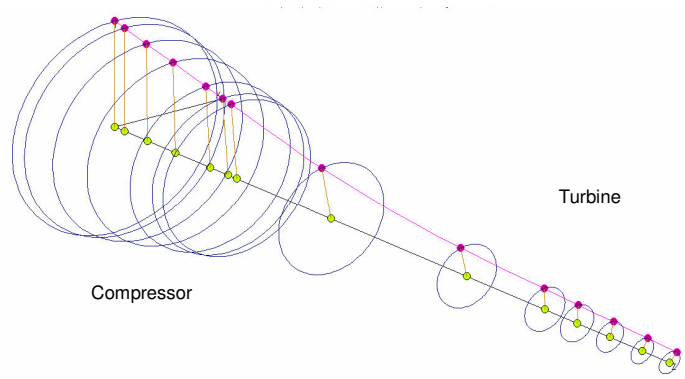

Fig. 14: Unstable Forward Precession at Whirl Speed 23,546 rpm [10]

Stability Optimization Using Damped Support: Addition of external damping to restabilize high-speed rotors is a common practice by engineers. External damping can be achieved in several ways. Floating ring bearing is one method of adding external damping. The floating ring acts as a bearing with six-oil-groove, and the outer clearance acts as additional damper. Squeeze-film dampers are also another way of re-stabilizing rotors and they are widely used in turbomachinery.

This phase of the research will attempt to design external damping in order to stabilize the turbocharger with six-oil-groove bearings. Damped supports (pedestal) are added at both six-oil-groove bearings with several stiffness and damping values. The turbocharger model will be similar to that in Fig. 7. The objective now is to find the optimum stiffness and damping values that will stabilize the system.

The stiffness values of the pedestal are assumed as:

$$K_P = \frac{K_{xx} + K_{yy}}{2}$$

where the *Kxx* and *Kyy* values are at both compressor and turbine bearings and in the analysis will be computed at speed 100,000 RPM.

The damping values of the pedestal are assumed as:

$$C_P = (0.1, 0.5, 1, 2, 5) \times \left(\frac{C_{xx} + C_{yy}}{2} \right)$$

where the *Cxx* and *Cyy* values are picked at speed 100,000 RPM from both bearings.

The *Kp* at 100,000 RPM is found to be 49.7 N/m at the compressor bearing and 444.5 N-s/m at the turbine bearings. The *Cp* values are (0.0345, 0.1725, 0.345, 0.69, 1.725) N-s/m at compressor bearings and (0.014, 0.07, 0.14, 0.28, 0.7) N-s/m. For each value of *Cp* with the value of *Kp*, the whiling analysis of the model will be computed. The first two unstable forward whirling modes will be investigated, and the logarithmic decrement will be picked. The procedure is repeated for values of 2*Kp* and ½*Kp*. In Fig. 15, the real part of the root of the characteristic equation (derived from logarithmic decrement and running speed) for the first whirl mode is plotted against *Cp*'s values for each *Kp* value at the compressor bearing. The positive real part values means instability, whereas negative values is stability region. One can notice that acceptable values of *Cp* would be between 0.2 N-s/m and 0.8 N-s/m for any *Kp* value. In other words, the first whirling mode should be re-stabilized when the value of the pedestal damping is 0.2-0.8 N-s/m with any values of *Kp*'s (½*Kp*, *Kp* or 2*Kp*).

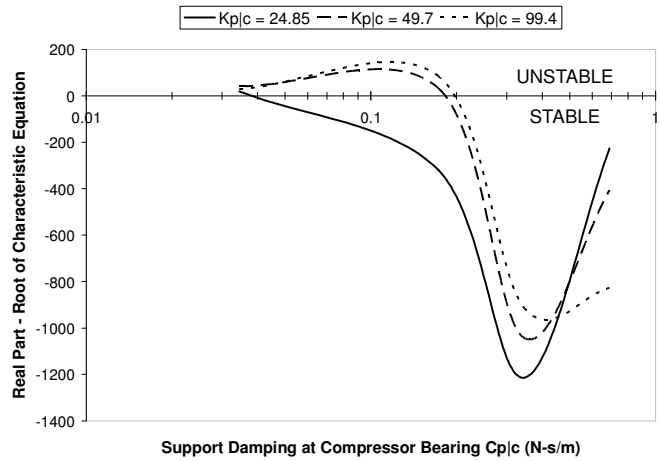

Fig. 15: 1st Whirling Mode Stability Optimization [10]

The real parts of the eigenvalues of the second whirling mode were also plotted against the *Cp*'s values for each *Kp*, as shown in Fig. 16. Unfortunately, the plot clearly shows that this mode did not stabilize in any trial of pedestal damping values. Though the second whirling mode tends to reach the stability region (Fig. 16) at very low values of *Cp*, it is still considered unstable. Even though the second mode re-stabilizes at much lower *Cp* values, the first whirling mode (Fig. 15) will bound again in the instability reign.

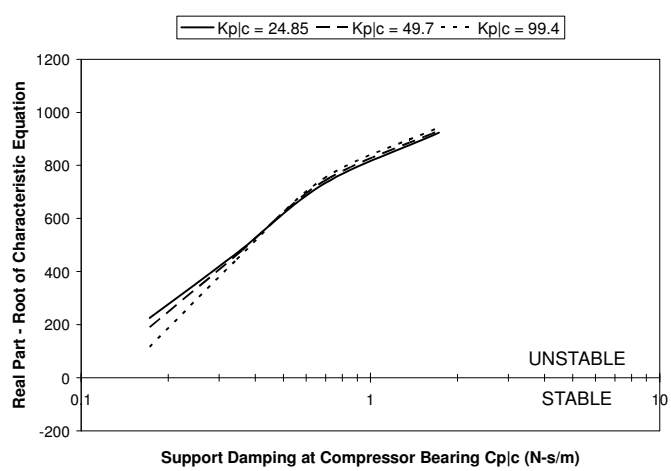

Fig. 16: 2nd Whirling Mode Stability Optimization [10]

Flexible rotor stability optimization achieved by using damped support is a proven method in re-stabilizing turbomachinery. However, the above investigation can either tell that this approach is not applicable for the turbocharger case, or the very high running speed (100,000 RPM) requires some special considerations.

CONCLUSIONS AND RECOMMENDATIONS

The research presented in this paper has shown that turbochargers exhibit high subsynchronous vibrations and self-exited instabilities. Investigation of the dynamic stability of the rotor-bearing system was the main objective. Stability evaluation with linear bearing characteristics were conducted for several fluid film journal bearings using the capabilities of DyRoBeS© FEA code [10]. These results were not documented in this paper but the results were not promising for this particular design and speed range.

Analytical prediction of turbocharger rotor whirling with nonlinear floating ring bearings were first computed using DyRoBeS© as a reference to actual performance of the rotor-bearing system. The computations had predicted a good estimation to turbochargers real dynamical response. There are two unstable whirling modes persist during the turbocharger operation speed range. The first one is a rigid body mode of a conical mode shape where the compressor and turbine wheels moving forward out of phase. The second whirl mode has a cylindrical mode shape with slight bending in the shaft where the turbine and compressor wheels moving forward in-phase.

Linear analysis of the turbocharger rotordynamics is a reliable way to study the dynamic stability and whirling modes. Various linear bearings models were created and employed in the turbocharger model to examine the stability of the system. Though tilting-pad bearings provided stable turbocharger rotor-bearing system, they are still relatively expensive to produce. Other types of fluid-film journal bearings showed unaccepted instabilities in the linear running. However, the turbocharger with floating ring bearing has the least unstable whirling operation. The floating ring design introduced an external damping by the outer oil-film that re-stabilized the whirling modes. Therefore, an attempt was made to find an optimum external damping for the turbocharger with a six-oil-groove bearing.

Although the turbocharger with linear floating ring bearings is dynamically unstable, nonlinearities in real operation could damp the destabilizing forces. However, high whirling running may cause permanent damage to bearings and casing.

The attempt to optimize the whirling modes by adding damped supports to the six-oil-groove bearing was not totally successful. The reason might be that the analysis was linear, though actual running is nonlinear and stable limit cycles are possible. .

There is also another recommended technique that might re-stabilize the turbocharger rotor-bearing system. Optimizing and redesigning the turbocharger rotor mass distribution could be a different route to give a better dynamical performance.

New bearing bore geometries need to be investigated to provide stability over the entire operation speed range. Promise of a distorted bore fixed geometry design [11] must be investigated both analytically and experimentally for this particular automotive turbocharger. A low cost distorted tilted lobe bearing must be designed to achieve a similar performance to the stable tilting pad bearing design.

Experimental investigations are currently in progress to find methods of improving the overall stability of the subject turbocharger. These results will be the subject of a future paper.

REFERENCES

[1] Watson, N. and Janota, M. S., 1982, *Turbocharging the Internal Combustion Engine*, Wiley, New York.

[2] Gunter, E. G. and Chen, W. J., 2005, "Dynamic Analysis of a Turbocharger in Floating Bushing Bearings," *Proc. 3rd International Symposium on Stability Control of Rotating Machinery*, Cleveland, OH.

[3] Ehrich, F. F., 1999, *Handbook of Rotordynamics*, Krieger Pub. Co., Malabar, FL.

[4] Holmes, R., Brennan, M. J. and Gottrand, B., 2004, "Vibration of an Automotive Turbocharger – A Case Study," *Proc. 8th International Conference on Vibrations in Rotating Machinery,* Swansea, UK, pp. 445-450.

[5] Li, C. H. and Rohde, S. M., 1981, "On the Steady State and Dynamic Performance Characteristics of Floating Ring Bearings," *Trans. ASME Journal of Lubrication Technology*, **103**, pp. 389-397.

[6] Shaw, M. C. and Nussdorfer, T. J., 1947, "An Analysis of the Full-Floating Journal Bearing," Report No. 866, National Advisory Committee for Aeronautics (NACA).

[7] Gunter, E. G. and Chen, W. J., 2000, *DyRoBeS© - Dynamics of Rotor Bearing Systems User's Manual*, RODYN Vibration Analysis, Inc., Charlottesville, VA.

[8] Kirk, R. G., 1980, "Stability and Damped Critical Speeds: How to Calculate and Interpret the Results," *Compressed Air and Gas Institute Technical Digest*, **12**(2), pp. 1-14.

[9] Tanaka, M., Hatakenaka, K. and Suzuki, K., 2002, "A Theoretical Analysis of Floating Bush Journal Bearing with Axial Oil Film Rupture Being Considered," *Trans. ASME Journal of Tribology*, **124**, pp. 494-505.

[10] Alsaeed, A. A., 2005, "Dynamic Stability Evaluation of an Automotive Turbocharger Rotor-Bearing System," M.S. Thesis, Virginia Tech Libraries, Blacksburg, VA.

[11] Swanson, E., 2005, "Fixed-Geometry, Hydrodynamic Bearing with Enhanced Stability Characteristics," *STLE Tribology Transactions*, **48**(1), pp. 82-92.

[12] Born, H. R., 1987, "Analytical & Experimental Investigation of the Stability of the Rotor-Bearing System of New Small Turbocharger", *Proc. Gas Turbine Conference and Exhibition*, Anaheim, CA, 10p.